Self-Supervised Drone Detection Using Acoustic Data

*Juann Kim
Dept. of Artificial Intelligence
Sungkyunkwan University
Suwon, South Korea
kimjuann@g.skku.edu

Mia Y. Wang
Computer Science
College of Charleston
Charleston, USA
wangy5@cofc.edu

*Eric T. Matson
Computer and Information Technology
Purdue University
West Lafayette, USA
ematson@purdue.edu

2023 Seventh IEEE International Conference on Robotic Computing (IRC) | 979-8-3503-9574-7/23/$31.00 ©2023 IEEE | DOI: 10.1109/IRC59093.2023.00018

***Abstract*—In recent years, the research focus on drone detection and identification via acoustic signals has grown significantly, spanning applications in both commercial and military domains. The predominant approach in this research area involves utilizing labeled data in the supervised machine learning models. However, this approach has inherent limitations as it trains models to detect or identify specific drone types present in the training dataset, constraining their generalization capacity to new drone types and tasks. This paper introduces a novel solution by employing self-supervised learning to address these limitations. The proposed model, trained without the need for labeled data, exhibits the capability to classify and identify diverse drone types and objects. It learns to differentiate between different drone models by training with a specific drone model, creating representations suitable for various downstream tasks such as classification and identification. Experimental results demonstrate the superiority of this self-supervised method over state-of-the-art supervised approaches, particularly in the context of drone detection benchmarks that lack label information.**

***Index Terms*—self-supervised learning, supervised learning, drone detection, counter drone, acoustic data**

I. Introduction

The usage of Unmanned Aerial Vehicles (UAVs), commonly referred to as drones, has significantly increased. Accordingly, lots of drone-related studies have been studied such as drone detection and identification [1] [2]. Especially, there are some works for drone detection using acoustic signals [2] [6]. However, most of this work is conducted using supervised learning methods which need label information. There are limitations of previous methods. Primarily, the process of labeling data demands a significant investment of time. Moreover, models trained using such labeled data may exhibit weakened generalization capabilities. Lastly, these methods are confined by the drone types present within their training datasets, thereby restricting their applicability to diverse drone models. Drone sounds exhibit distinct features distinguishing them from other auditory cues, like those produced by vehicles, animals, and insects, as illusated by the dataset distribution displayed in Figure 1 and 2.

We show the distribution of the benchmark dataset from [2] for multi-classes classification between drones and other objects. We observe that there is a boundary between drone sounds and other sounds. The 0 and 1 and 2 are represented no drone objects, and drone type1 and drone type2 respectively. In Figure 1, we can see the 2-dimension boundary between "no drone" and "drone". Figure 2 shows a boundary clearly. Particularly, we can see the distribution of each drone type and there is a clear difference between the sound signals of the two types of drones.

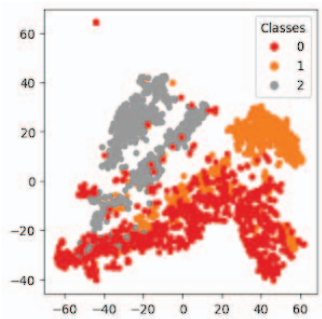

Fig. 1. The distribution of 2D

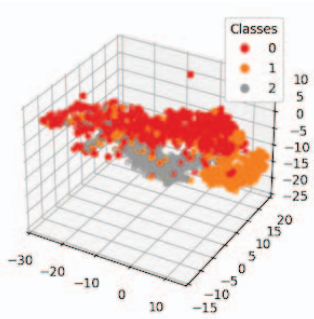

Fig. 2. The distribution of 3D

The above observations motivate us to study the trained model that can distinguish drones from other objects using sound signals and identify other drones using specific drone sounds.

In this work, we propose a new direction for enhancing the generalization ability of a model that is trained without any label information. Motivated by the success of self-supervised learning such as a Simple framework for Contrastive Learning of visual Representations(SimCLR) [9] that was proposed to create an image representation for various downstream tasks. The proposed self-supervised learning methods can alleviate limitations of supervised models such as Convolutional Neural Networks (CNNs), and Recurrent Neural Networks (RNNs) [10] and visual representation learning without human supervision [4] [5]. The SimCLR is used to extract an image representation from image of the MFCC features for classifying and identifying a drone without any label information.

The main contributions are summarized as follows:

- To the best of our knowledge, we are the first to apply a self-supervised methods to create an image representation

* Corresponding author.

Authorized licensed use limited to: Ariel University. Downloaded on January 01,2026 at 09:09:24 UTC from IEEE Xplore. Restrictions apply.

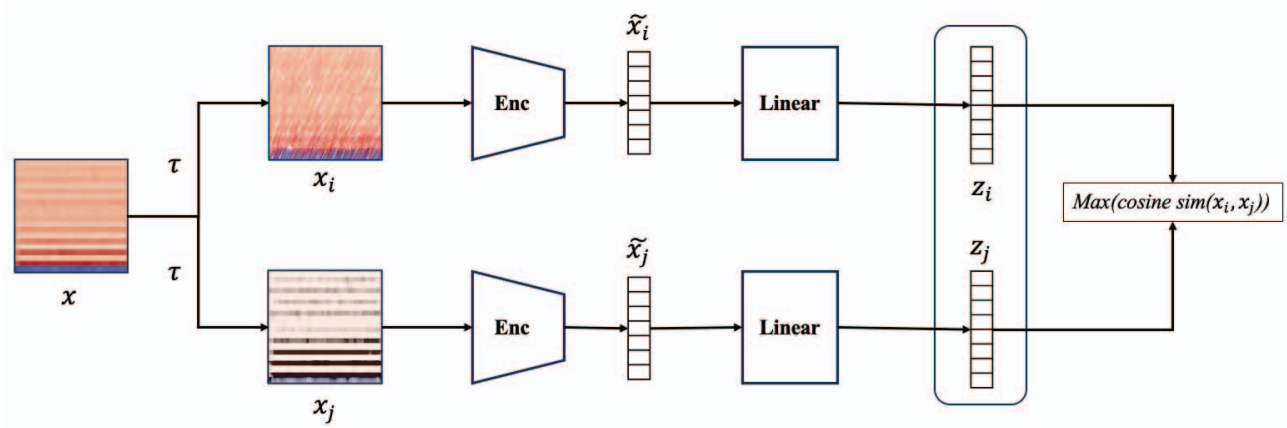

Fig. 3. First, the acoustic data is converted to the image data using MFCC feature extraction method. Second, One sample from a mini-batch, is augmented for creating new images by using six different methods. Third, Each image through a ResNet-18 for making a latent vector. Fourth, Each latent vector passes to one linear layer to get an elaborated representation of an augmented image. Lastly, Maximizing a cosine similarity between target and positive samples.

for identifying between drones and others trained by specific drone type.

- We experimentally show that even if the model is trained with the sound signal of a particular drone, the sound signal of another drone can be distinguished.
- Our model learned without label information shows that they are as powerful as models learned in a supervised manner.

II. Related Work

A. Drone Detection

With the escalating adoption of drones, extensive research efforts have been undertaken to devise methods for drone detection, leveraging an array of sensors including radars, cameras, microphones, and more. In [3], A Radar is used for classifying between small drones and birds. In [6] and [11], The DJI Matrice200 and DJI Mavic2 are used to collect audio and visual data using microphone and camera. These works are conducted in model-specific conditions that can not be applied to other drone types except used specific drone type for training a model. This approach can not be used to real world application such as drone detection and identification. In this paper, we show that self-supervised learning can solve this problem by creating a generalized and valuable image representations.

B. Contrastive Learning

In [12], they use a siamese network base contrastive learning to learn the representation for detecting drones. The proposed model is trained using a radio-frequency (RF) signal dataset in unsupervised learning scenarios. In [13], they use a CNN-based Siamese network with contrastive learning for matching between aerial and satellite imagery. These studies are used a siamese network which is focused on learning a relation between latent vectors. On the other hand, we use a SimCLR which is focused on learning representations between latent vectors for varioud downstream tasks.

III. Methodology

A. Data Preparation

We use a publicly available audio dataset for drone detection and identification collected in [10]. There are two drone models which are ”Bebop” and ”Membo”. The number of dataset from each drone type is 666 and other objects are 1000. In this paper, The ”Membo” and the ”Bebop” datasets are used for training and testing respectively. We randomly select a counterpart dataset that is for no drone from a titled as ’A’ in Multi-Class drone classification task. The no drone dataset includes that animals, natural soundscapes and water sounds, human and urban noises and etc.

In [11] [7], drones can be detected successfully using image dataset of MFCC features. Follow this process, MFCC method is used to extract image features from sound signals for detecting and classifying drones and other objects. Each hyper-parameters of MFCC method are set to default value and each image shape is 348 for width, and 154 for height. The statistics of dataset is summarized in Table I.

TABLE I
Dataset statistics for drone detection and identification

Dataset	Type	Train	Test
Drone	Membo	666	0
	Bebop	0	666
No Drone	A	1001	0
	A’	0	1000

B. The Contrastive Learning Framework

Motivated by the traditional contrastive learning algorithm (SimCLR), a model is trained by maximizing the agreement of two augmented views from the same image sample using a contrastive loss in the latent space. Our model included same processes of SimCLR consists of five processes as illustrated in Figure 3.

Authorized licensed use limited to: Ariel University. Downloaded on January 01,2026 at 09:09:24 UTC from IEEE Xplore. Restrictions apply.

- A data preparation that converts acoustic signals to image data for extracting meaningful image representations from a model such as CNNs.
- Various stochastic augmentation methods are used for creating randomly two correlated views of the same image example, denoted $\tilde{x}_i$ and $\tilde{x}_j$, which are positive pair in mini-batch. In this work, we sequentially apply six simple augmentations: Resize, Cropping, Horizontal flipping, Color distortions, Grayscale, and Gaussian blur.
- ResNet-18 is used to a pre-trained Convolution Neural Networks (CNNs) as a neural network-based encoder $f(\cdot)$ that extracts representation vectors $\tilde{x}_i$ from each augmented image in each mini-batch.
- A simple neural network that projects $\tilde{x}_i$ to latent space where contrastive loss is applied. The cosine similarity is used for calculating the similarity between the target image and the sample image.

$$\mathrm{Sim}(\mathbf{A},\mathbf{B}) = \frac{\mathbf{A}\cdot\mathbf{B}}{\|\mathbf{A}\|\cdot\|\mathbf{B}\|} \tag{1}$$

- In the latent space, the loss function allows positive samples to get closer to each other and away from negative samples from the target sample.

Figure 4 shows a training process in latent space. One target sample is learned to be close to the positive sample and away from the negative samples. There are negative samples from other images in the mini-batch. The number of total samples in latent space is the same as *batch size * 2* for one mini-batch. Finally, there are one target image and one positive image, and *(batch size * 2) - 2* negative images. The final loss function using a cosine similarity is defined as:

$$\mathcal{L}(i,j) = -\log \frac{\exp(\mathrm{sim}(\mathbf{z}_i,\mathbf{z}_j)/\tau)}{\sum_{k=1}^{2N} \mathbb{1}_{[k\neq i]} \exp(\mathrm{sim}(\mathbf{z}_i,\mathbf{z}_k)/\tau)} \tag{2}$$

The loss function forces the target image to be close to the positive image and away from the negative images by maximizing a cosine similarity between each latent vector. Following [9], a single linear layer with ReLU as an activation function is used to improve performance.

C. The Supervised Learning Framework

Transfer learning methods such as ResNet-18 and MobileNet V2 are compared to select the best model for recording a high accuracy on identifying and classifying drones and other objects. The accuracy of the ResNet-18 is slightly better than the MobileNet V2 on this task. Finally, the trained ResNet-18 is used to compare to self-supervised learning method which is contrastive learning for showing the ability of the self-supervised model on drone detection.

IV. Experiment

We trained the model according to the dataset shown in table I and tested its performance. When the model is learned, the membo model and class A are labeled as a drone and not drone respectively. When the model is evaluated, bebop is labeled as a drone, and A' is labeled as not a drone. Based on the above setting, The performance of the supervised model and the self-supervised model is compared.

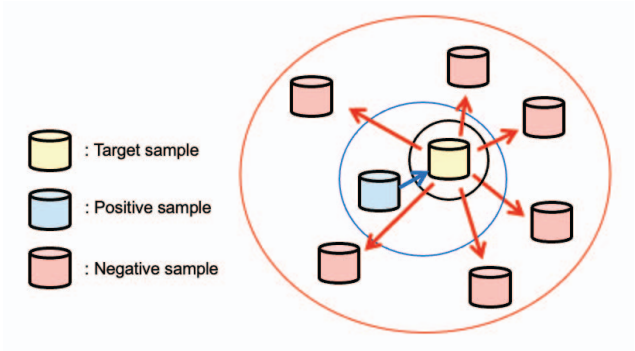

Fig. 4. Latent space when the model is training

TABLE II
RESULTS OF RESNET-18

ResNet-18		batch size			
		32	64	128	256
epoch	30	81.45	85.05	83.67	84.99
	50	83.91	84.21	**85.61**	83.61
	100	84.45	84.51	84.93	83.67

A. Supervised Learning

Transfer learning is used to classify two categories: drone and other objects that are explained in Section III. We evaluate ResNet-18 and MobileNet V2 for searching the best model that is fitted on this task. To find the best model, various hyperparameters such as the number of epochs and batch size are searched in the same learning rate as 0.001. The ResNet-18 is recorded higher accuracy as a 85.61% than MobileNet V2 when the epoch is 50, and the batch size is 128. The MobileNet V2 records 85.29% when the epoch is 50 and the batch size is 32. The results show us that when using supervised learning models, large epoch and large batch size do not necessarily improve performance. It shows that deep hyperparameter searching is necessary in supervised manner.

B. Self-Supervised Learning

SimCLR is used to create a latent vector that can be used to detect and identify drones and other objects. We set the 100 epochs and 256 batch size and 0.0003 learning rate for training

TABLE III
RESULTS OF MOBILENET V2

MobileNet V2		batch size			
		32	64	128	256
epoch	30	85.17	84.09	82.05	81.99
	50	**85.29**	84.39	75.75	81.51
	100	84.45	81.03	84.33	83.13

Authorized licensed use limited to: Ariel University. Downloaded on January 01,2026 at 09:09:24 UTC from IEEE Xplore. Restrictions apply.

TABLE IV
RESULTS OF SIMCLR (RESNET-18)

SimCLR		(Test) batch size				
		128	256	512	1024	2048
Epoch	100	62.78	63.84	67.05	66.58	79.29
	300	64.29	62.02	65.85	67.98	84.69
	500	63.23	63.08	67.05	67.12	**85.87**

TABLE V
THE RESULTS OF WHEN THE TRAINING EPOCH IS 1000, THE TEST BATCH SIZE IS 2048

Output Dimension	512	1024	2048	4096
Top 1 Accuracy	86.56	**87.91**	84.65	86.88

a model. This model outperforms the supervised learning models by recording an accuracy of 85.87% that is shown in Table IV without label information in small epoch and batch size setting.

Through our experiments, the results show the trained model can successfully detect and identify drones that are not included in the training data and other objects. Each result is obtained by averaging over 3 turns for accurate evaluation.

Figure 5 shows the results of linear evaluation using three different the number of training epochs and visualizes the Table IV. and Table V. The batch size of testing is fixed to 2048 and other things are same as previous setting of training process. We observe that the larger the dimension does not guarantee the better performance. In Table V, The biggest epoch is set to 1000 and the results are evaluated starting from 512 dimension of projection layer to 4096. The best accuracy is recorded as a 87.91% when the dimension is 1024 and the epoch is 1000 which is outperformed the supervised methods.

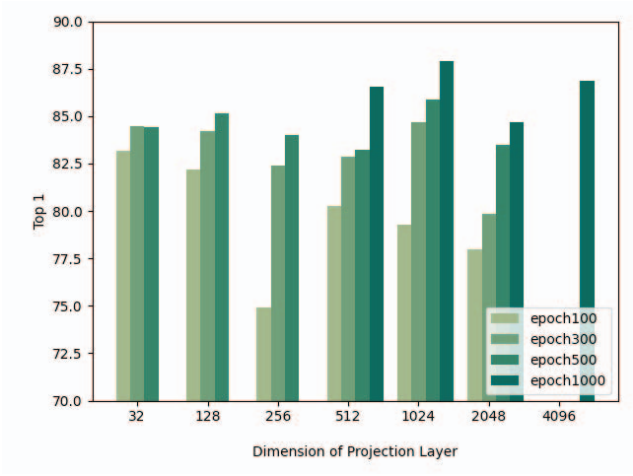

Fig. 5. Linear evaluation of representations with various dimensions of projection head between various training epochs

V. CONCLUSION

In this work, we verify that a trained model without label information can classify between drones and other objects using sound signals. Additionally, a trained model using specific drone sounds can identify other drone sounds. This research shows that limitations of previous works such as drone-specific models and time-consuming to label data can be solved using self-supervised learning methods. The self-supervised learning methods open a door to generalize features for various tasks. In the next phase of our research, we will apply state-of-the-art models based on contrastive learning such as BYOL [14] and MoCo [15] to various drone datasets.

REFERENCES

[1] Svanström, F., Alonso-Fernandez, F. & Englund, C. Drone Detection and Tracking in Real-Time by Fusion of Different Sensing Modalities. *Drones*. **6**, 317 (2022)

[2] Katta, S., Nandyala, S., Viegas, E. & AlMahmoud, A. Benchmarking Audio-based Deep Learning Models for Detection and Identification of Unmanned Aerial Vehicles. *2022 Workshop On Benchmarking Cyber-Physical Systems And Internet Of Things (CPS-IoTBench)*. pp. 7-11 (2022)

[3] Torvik, B., Olsen, K. & Griffiths, H. Classification of birds and UAVs based on radar polarimetry. *IEEE Geoscience And Remote Sensing Letters*. **13**, 1305-1309 (2016)

[4] Hinton, G., Osindero, S. & Teh, Y. A fast learning algorithm for deep belief nets. *Neural Computation*. **18**, 1527-1554 (2006)

[5] Kingma, D. & Welling, M. Auto-encoding variational bayes. *ArXiv Preprint ArXiv:1312.6114*. (2013)

[6] Kim, J., Lee, D., Kim, Y., Shin, H., Heo, Y., Wang, Y. & Matson, E. Deep Learning Based Malicious Drone Detection Using Acoustic and Image Data. *2022 Sixth IEEE International Conference On Robotic Computing (IRC)*. pp. 91-92 (2022)

[7] Wang, Yaqin, Chu, Z., Ku, I., Smith, E Cho and Matson, Eric T. A Large-Scale UAV Audio Dataset and Audio-Based UAV Classification Using CNN. *2022 Sixth IEEE International Conference On Robotic Computing (IRC)*. pp.186-189 (2022)

[8] He, K., Zhang, X., Ren, S. & Sun, J. Deep residual learning for image recognition. *Proceedings Of The IEEE Conference On Computer Vision And Pattern Recognition*. pp. 770-778 (2016)

[9] Chen, T., Kornblith, S., Norouzi, M. & Hinton, G. A simple framework for contrastive learning of visual representations. *International Conference On Machine Learning*. pp. 1597-1607 (2020)

[10] Al-Emadi, S., Al-Ali, A., Mohammad, A. & Al-Ali, A. Audio Based Drone Detection and Identification using Deep Learning. *2019 15th International Wireless Communications Mobile Computing Conference (IWCMC)*. pp. 459-464 (2019)

[11] Kim, J., Kim, Y., Shin, H., Wang, M. & Matson, E. How Far Can a Drone be Detected? A Drone-to-Drone Detection System Using Sensor Fusion. (2023,1)

[12] Li, T., Hong, Z., Cai, Q., Yu, L., Wen, Z. & Yang, R. Bissiam: Bispectrum siamese network based contrastive learning for uav anomaly detection. *IEEE Transactions On Knowledge And Data Engineering*. (2021)

[13] Ahn, S., Kang, H. & Lee, J. Aerial-Satellite Image Matching Framework for UAV Absolute Visual Localization using Contrastive Learning. *2021 21st International Conference On Control, Automation And Systems (ICCAS)*. pp. 143-146 (2021)

[14] Grill, J., Strub, F., Altché, F., Tallec, C., Richemond, P., Buchatskaya, E., Doersch, C., Avila Pires, B., Guo, Z., Gheshlaghi Azar, M. & Others Bootstrap your own latent-a new approach to self-supervised learning. *Advances In Neural Information Processing Systems*. **33** pp. 21271-21284 (2020)

[15] He, K., Fan, H., Wu, Y., Xie, S. & Girshick, R. Momentum contrast for unsupervised visual representation learning. *Proceedings Of The IEEE/CVF Conference On Computer Vision And Pattern Recognition*. pp. 9729-9738 (2020)

Authorized licensed use limited to: Ariel University. Downloaded on January 01,2026 at 09:09:24 UTC from IEEE Xplore. Restrictions apply.